ZX40E30E01

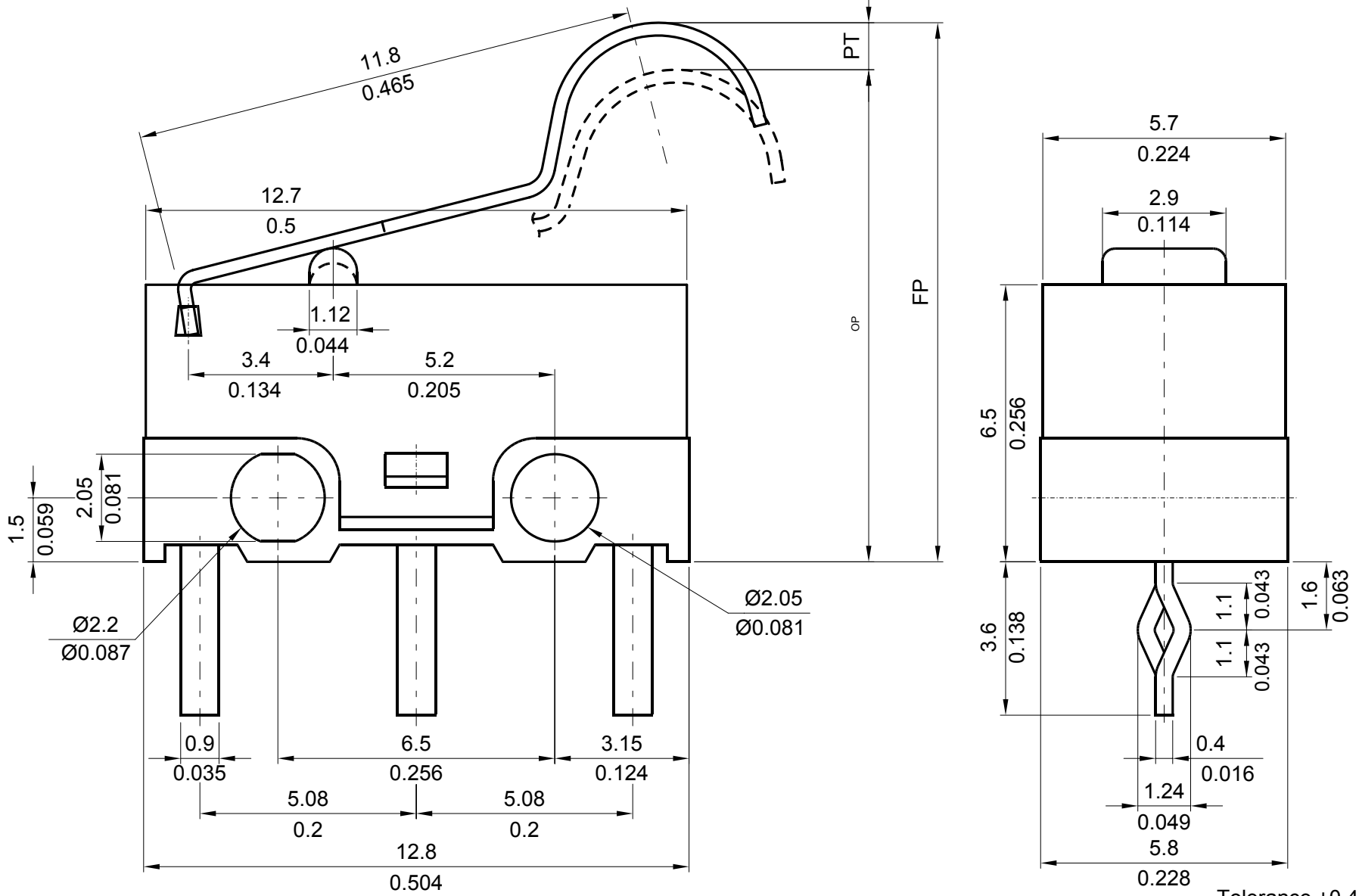

Tolerance ±0.4mm
±0.016inch

REV	DATE	APPROVAL	DESIGN	ENGINEERING CHANGE DESCRIPTION	VIEW		SIZE	A4	UNIT	mm/inch
					DATE	JUL 30,2002	VER.	1	FILE NAME	
					APPROVAL		CONFIRM		DESIGN	