ZX40E30A01

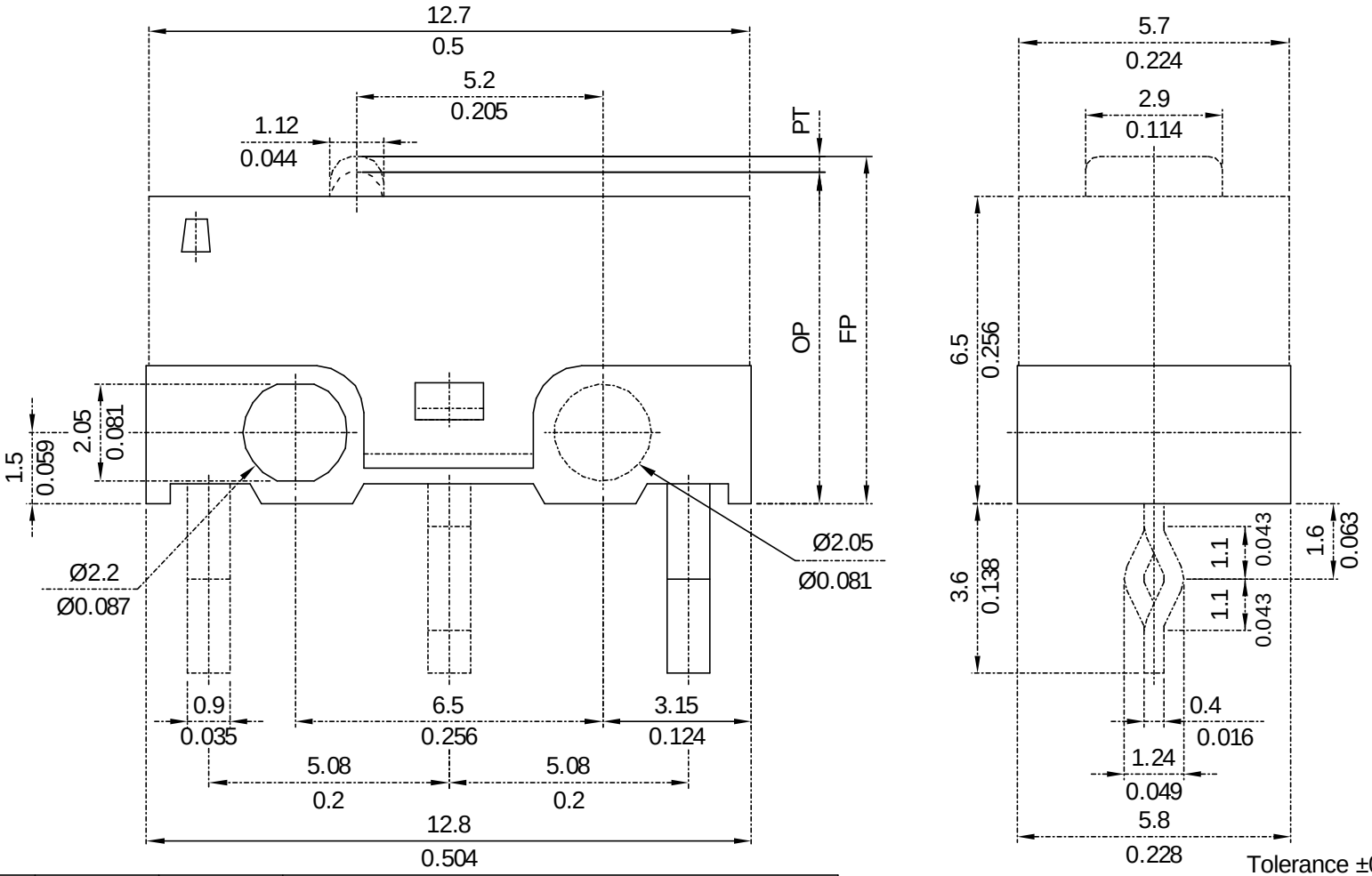

Tolerance ±0.4mm
±0.016inch

REV	DATE	APPROVAL	DESIGN	ENGINEERING CHANGE DESCRIPTION
1	JUN 14,2002			Add inch units

VIEW		SIZE	A4	UNIT	mm/inch
DATE	SEP 26,2001	VER.	2	FILE NAME	
APPROVAL		CONFIRM		DESIGN	