SW-G5L-02A0-H/(ZW10E15CD1)

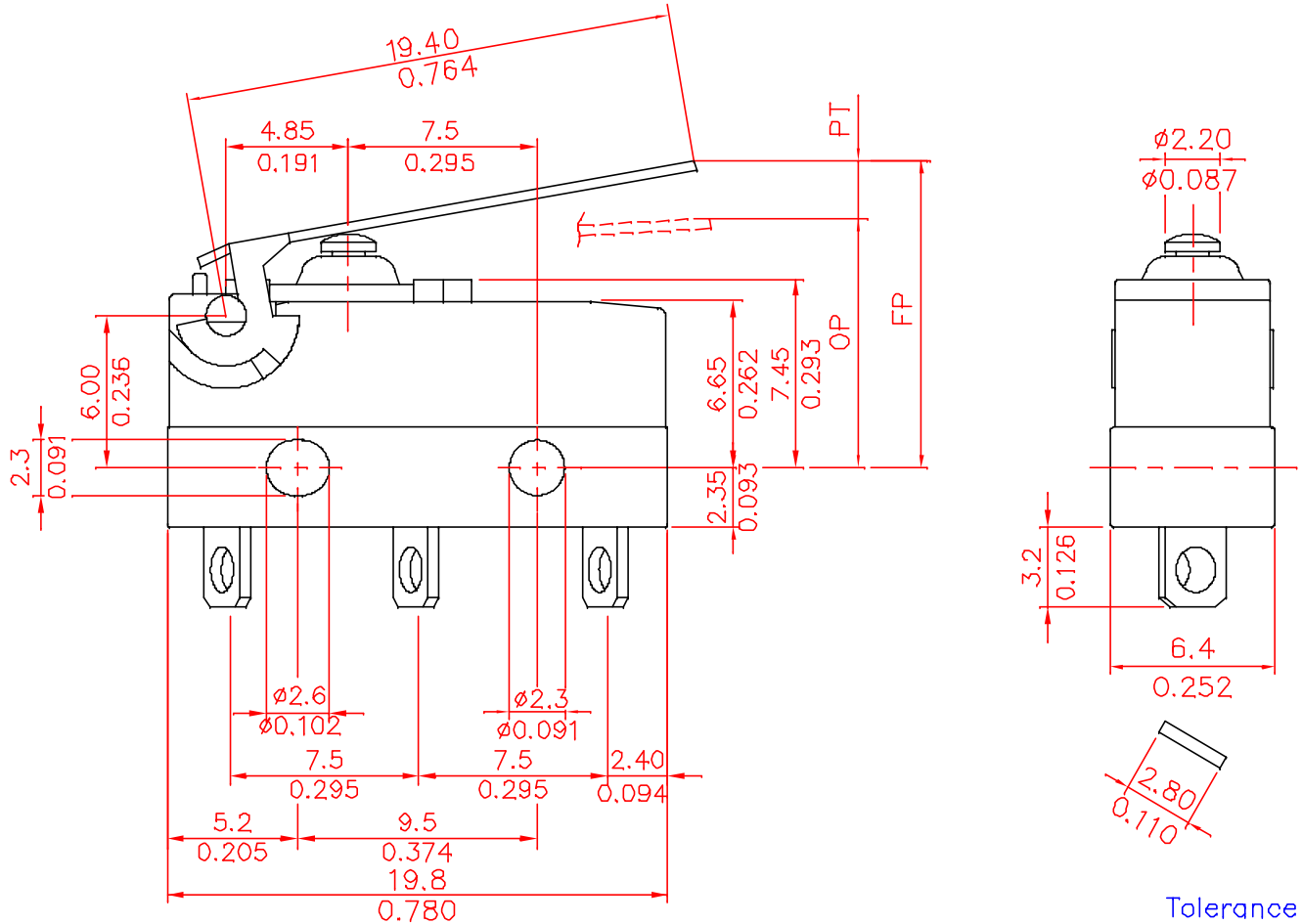

Tolerance ±0.4 mm
±0.016 inch

REV.	DATE	APPROVAL	DESIGN	ENGINEERING CHANGE DESCRIPTION	VIEW		SIZE	A4	UNIT	mm/inch
A	JUN 17,2002	DICK	DICK	add inch units						