ZM50E70F01

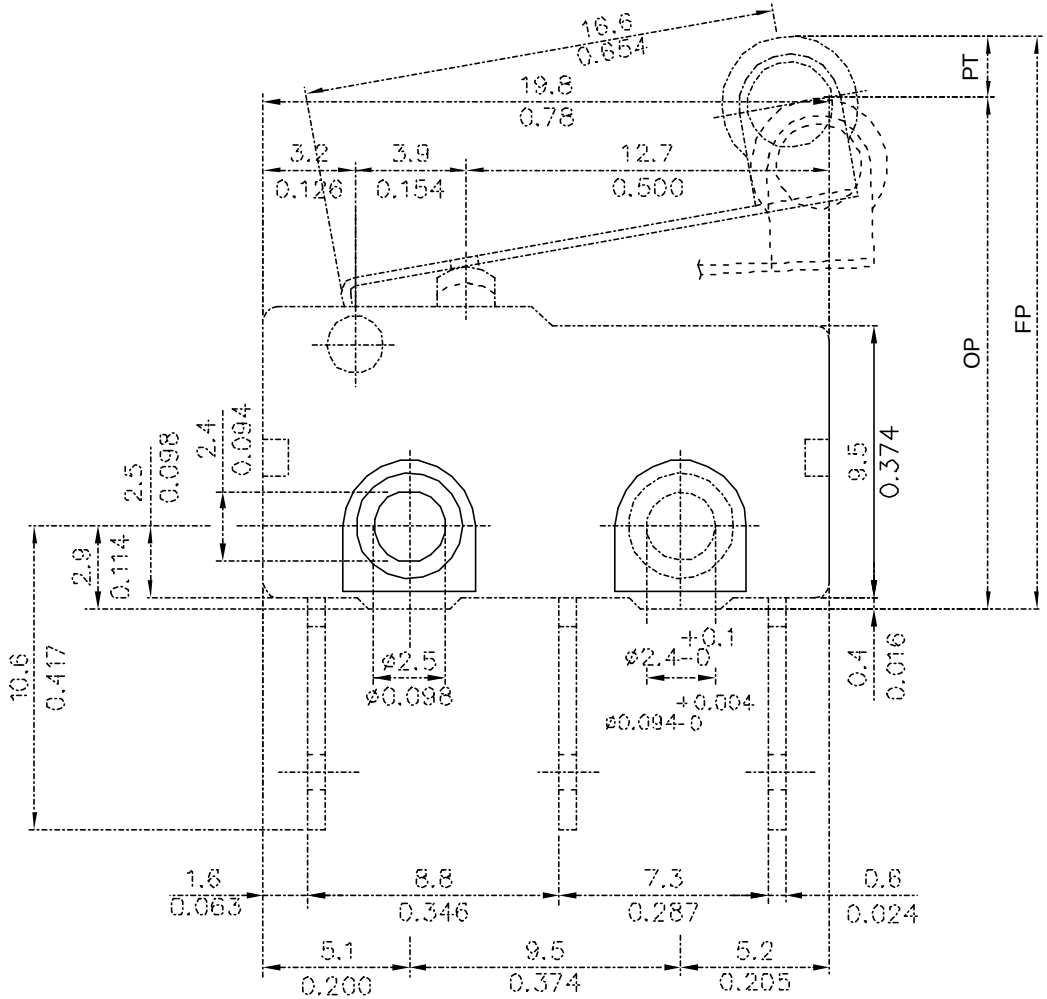

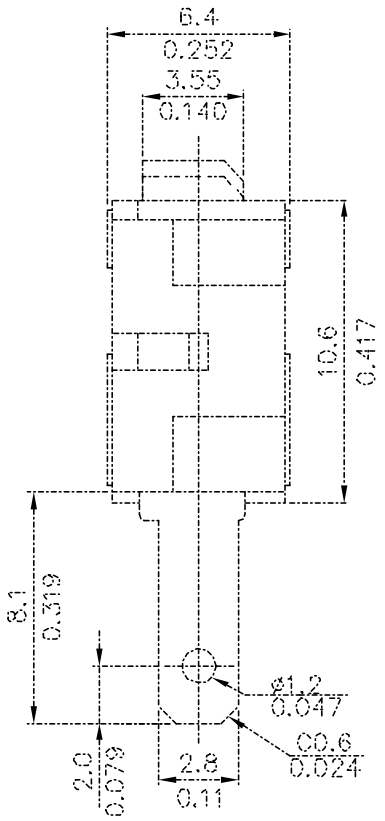

Tolerance ±0.4 mm
±0.016 inch

REV	DATE	APPROVAL	DESIGN	ENGINEERING CHANGE DESCRIPTION
1	JUN 19,2002			ADD INCH UNITS

VIEW		SIZE	A4	UNIT	mm / inch
DATE	JUN 19,2002	VER.	2	FILE NAME	
APPROVAL		CONFIRM		DESIGN	