ZM50E70E01

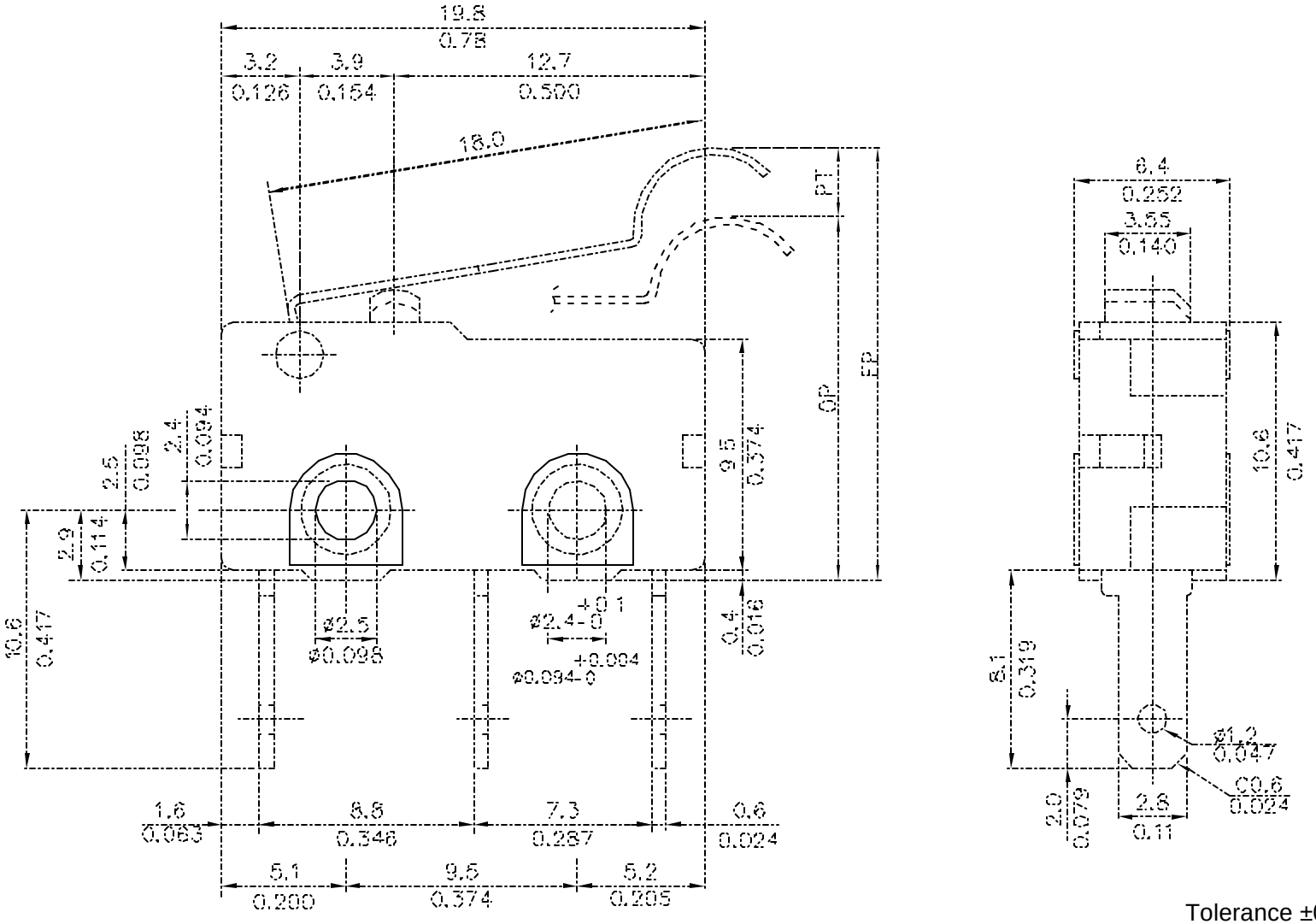

Tolerance ±0.4 mm
±0.016 inch

REV	DATE	APPROVAL	DESIGN	ENGINEERING CHANGE DESCRIPTION	VIEW		SIZE	A4	UNIT	mm / inch
					DATE	Aug 26,2002	VER.	1	FILE NAME	
					APPROVAL		CONFIRM		DESIGN	