# ZM10B70A01

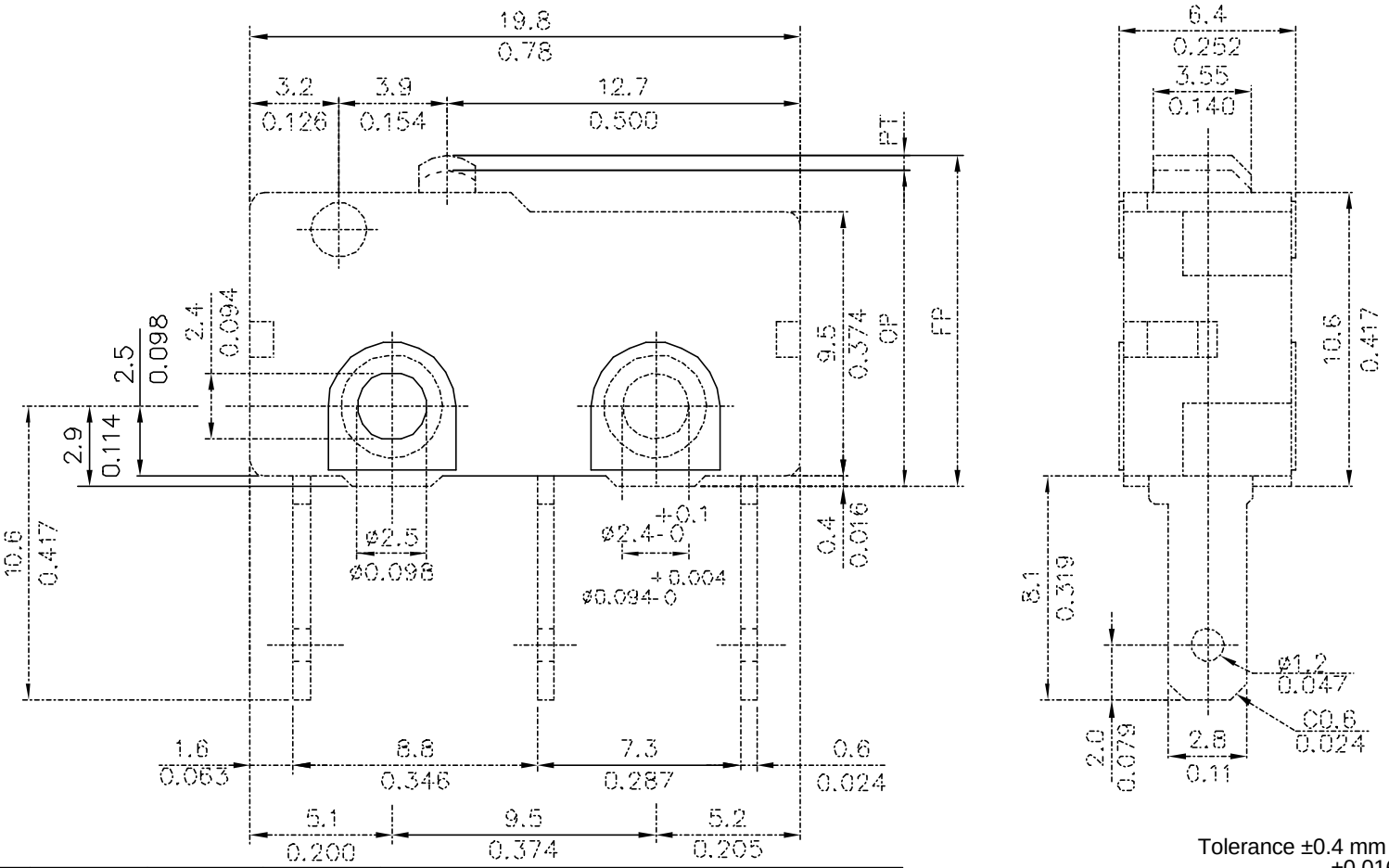


Tolerance ±0.4 mm
±0.016 inch

| REV | DATE | APPROVAL | DESIGN | ENGINEERING CHANGE DESCRIPTION |
|---|---|---|---|---|
| 1 | JUN 17,2002 | | | ADD INCH UNITS |

| | | | | | |
|---|---|---|---|---|---|
| VIEW | | SIZE | A4 | UNIT | mm / inch |
| DATE | JUN 17,2002 | VER. | 2 | FILE NAME | |
| APPROVAL | | CONFIRM | | DESIGN | |