MOUNTING DIMENSIONS (for reference only)

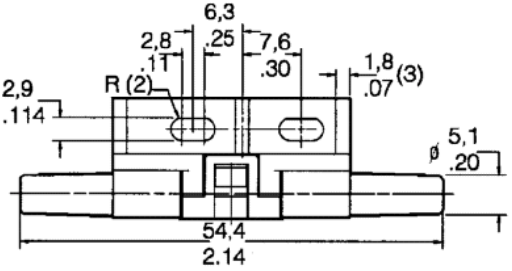

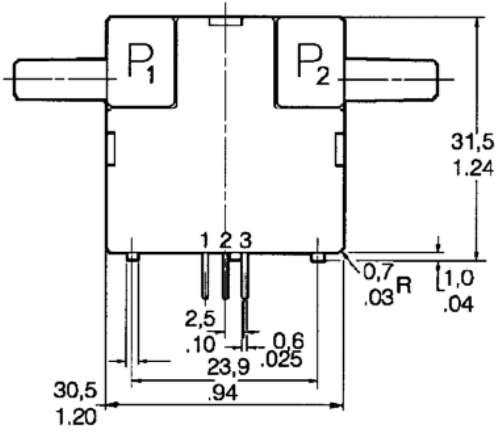

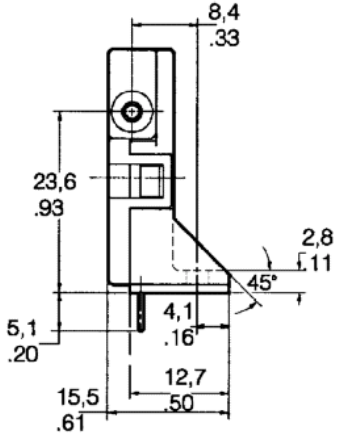

Note: Positive flow direction is defined as proceeding from Port 1 (P1) to Port 2 (P2) and results in positive output. Do not exert a force greater than 4.54kg (10 lbs.) in any direction.