MICRO SWITCH
FREEPORT, ILLINOIS, U S A
A DIVISION OF HONEYWELL
FED. MFG. CODE 81529

SWITCH - ENCLOSED

CATALOG LISTING
BZLN-LH3

M

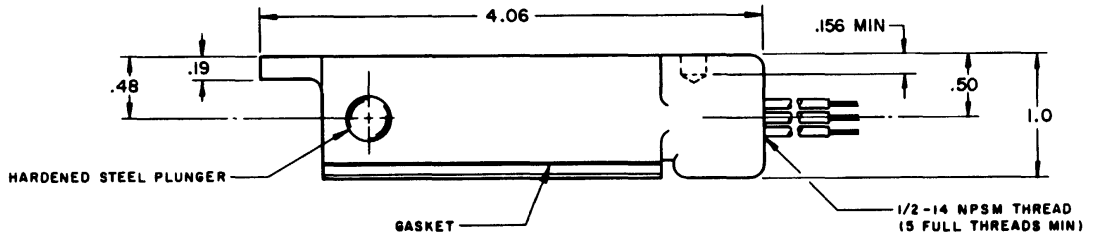

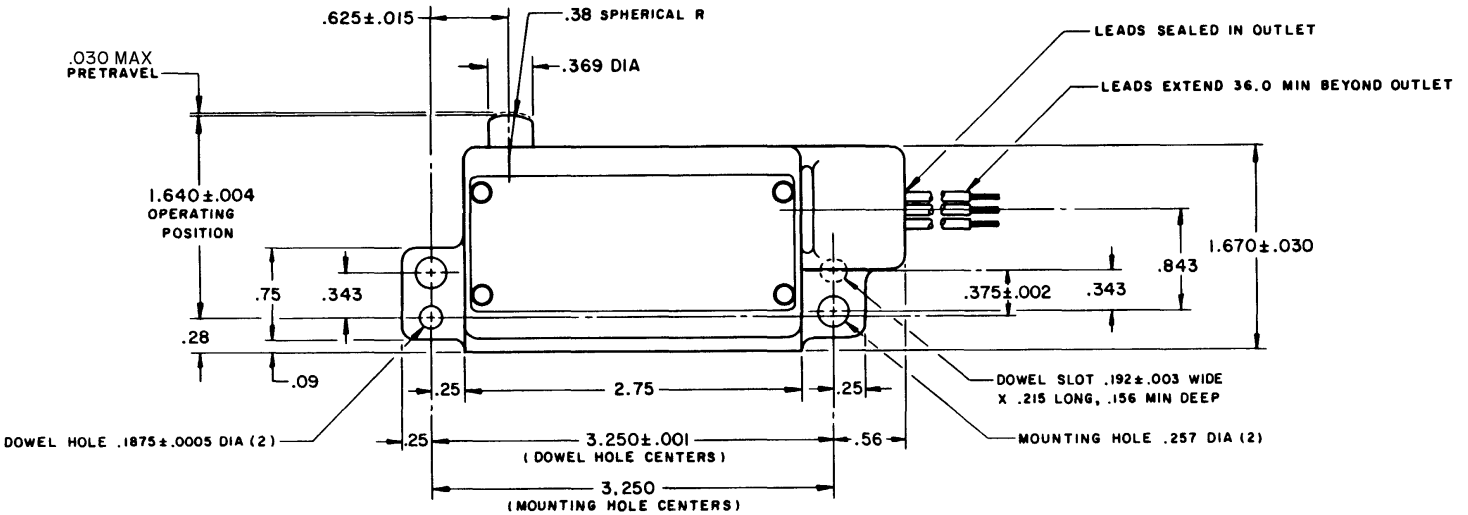

THIS DRAWING COVERS A PROPRIETARY ITEM AND IS THE PROPERTY OF MICRO SWITCH, A DIVISION OF MINNEAPOLIS-HONEYWELL REGULATOR CO. THIS DRAWING IS NOT TO BE COPIED OR USED WITHOUT THE APPROVAL OF MICRO SWITCH.

CHARACTERISTICS	ELECTRICAL DATA	
OPERATING FORCE — — — — 5 LB MAX	CONTACT ARRANGEMENT S P D T	SCALE FULL
RELEASE FORCE — — — — 1 LB MIN	-L96- 15 A-125, 250, OR 480 VAC 1/2 A-125 VDC ; 1/4 A-250 VDC 1/8 HP-125 VAC ; 1/4 HP-250 VAC	DO NOT SCALE PRINT
DIFFERENTIAL TRAVEL — — —.004 MAX		UNLESS OTHERWISE NOTED DIMENSIONS ARE IN INCHES
OVERTRAVEL — — — — —.203 MIN		TOLERANCES ARE: ONE PLACE (.0) ±.030 TWO PLACE (.00) ±.015 THREE PLACE (.000) ±.005 ANGLES ±
		WEIGHT .720 LB PLUS LEADS

WIRING CONNECTIONS -
COMMON - BLACK LEAD
NORMALLY OPEN - BLUE LEAD
NORMALLY CLOSED - RED LEAD

BZLN-LH3 | M | DRAWING NUMBER | ISSUE | REPLACES | RELEASE NO. | CHECK

REVISIONS

A	C011950	M B F 10 NOV 64
B	C050714	G J W 27 APR 82
C	C055988	M A M 31 OCT 84
D	C0-81715	J A K 26 SEP 95

DRAWN M B F 10 NOV 64 CHECK D A W 15 NOV 84 CHECK