efectorsoo
PL2652

PL-100-SEA01-E-ZVG/US/ /P

Pressure sensors

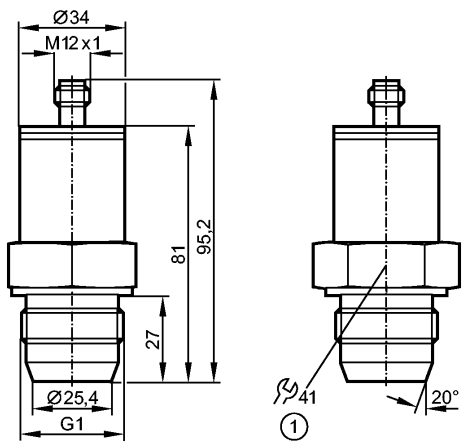

1: tightening torque 20 Nm

EC 1935/2004 EHEDG Certified

Product characteristics			
Electronic pressure sensor			
Quick disconnect			
no dead space			
Zero and span adjustable			
Programmable via EPS interface			
Sealing cone G 1 male			
Process connection: Sealing cone G 1 male			
Analog output			
Measuring range: -1...100 bar / -10...1450 psi / -0.1...10 MPa			
Application			
Application	Type of pressure: relative pressure Hygienic systems, viscous media and liquids with suspended particles Liquids and gases Use in gases at pressures > 25 bar only after contacting the manufacturer ifm		
Pressure rating	200 bar	2900 psi	20 MPa
Bursting pressure min.	650 bar	9425 psi	65 MPa
Medium temperature [°C]	-25...80		
Electrical data			
Electrical design	2-wire DC; 3-wire DC		
Operating voltage [V]	14...30 DC		
Insulation resistance [MΩ]	> 100 (500 V DC)		
Protection class	III		
Reverse polarity protection	yes		
Outputs			
Output	Analog output		
Output function	4...20 mA analog		
Overload protection	yes		
Analog output	4...20 mA		
Max. load [Ω]	max. (Ub - 13 V) / 20 mA; 550 at Ub = 24 V		
Measuring / setting range			
Measuring range	-1...100 bar	-10...1450 psi	-0.1...10 MPa
Setting range			
Analog start point, ASP	-1.0...75.0 bar	-10...1090 psi	-0.10...7.50 MPa

PL2652 - Electronic pressure sensor - eclass: 27201302 / 27-20-13-02

Analog end point, AEP	24.0...100.0 bar	350...1450 psi	2.40...10.00 MPa
in steps of	0.1 bar	10 psi	0.01 MPa
Factory setting	ASP = 0.0 bar; AEP = 100.0 bar		
Accuracy / deviations			
Accuracy / deviations (in % of the span) Turn down 1:1			
Characteristics deviation *)	< ± 0.6		
Linearity	< ± 0.5		
Hysteresis	< ± 0.1		
Repeatability **)	< ± 0.1		
Long-term stability ***)	< ± 0.1		
Temperature coefficients (TEMPCO) in the temperature range 0...80° C (in % of the span per 10 K)			
Greatest TEMPCO of the zero point	< ± 0.1		
Greatest TEMPCO of the span	< ± 0.2		
Reaction times			
Response time analog output [ms]	3		
Environment			
Ambient temperature [°C]	-25...80		
Storage temperature [°C]	-40...100		
Protection	IP 67		
Tests / approvals			
EMC	EN 61000-4-2 ESD: EN 61000-4-3 HF radiated: EN 61000-4-4 Burst: EN 61000-4-6 HF conducted:	4 kV CD / 8 kV AD 10 V/m 2 kV 10 V	
Shock resistance	DIN IEC 68-2-27:	50 g (11 ms)	
Vibration resistance	DIN IEC 68-2-6:	20 g (10...2000 Hz)	
MTTF [Years]	248		
Mechanical data			
Process connection	Sealing cone G 1 male		
Materials (wetted parts)	ceramics (99.9 % Al2 O3); PTFE; stainless steel 316L / 1.4435; surface characteristics: Ra < 0.4 / Rz 4		
Housing materials	stainless steel 316L / 1.4404; PEI; FPM (Viton)		
Min. pressure cycles	100 million		
Weight [kg]	0.349		
Electrical connection			
Connection	M12 connector; gold-plated contacts		

Wiring

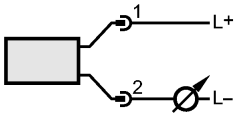

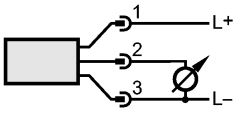

Remarks	
Remarks	*) linearity, incl. hysteresis and repeatability; (limit value setting to DIN 16086) **) with temperature fluctuations < 10 K ***) in % of the span per year The 3-A qualification is only valid if adapters with 3-A qualification are used for installation.
Pack quantity [piece]	1