efectorsoo
PI2098

PI-,25BRES30-MFRKG/US/ /P

Pressure sensors

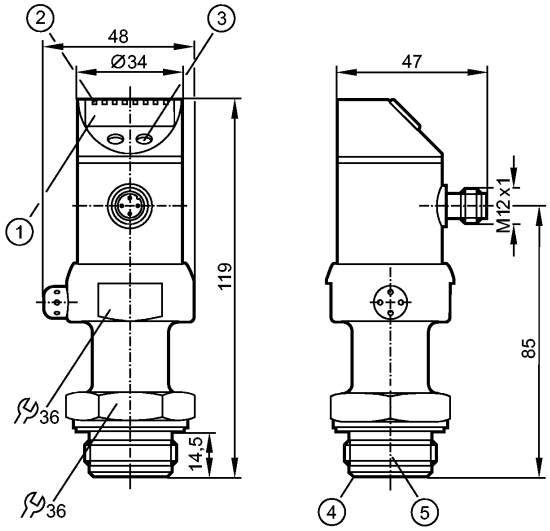

1: 4-digit alphanumeric display
2: status LEDs
3: Programming button
4: Aseptoflex sealing edge
5: Aseptoflex thread

EC 1935/2004 EHEDG Certified

Product characteristics

Combined pressure sensor
Quick disconnect
no dead space
Freely rotatable housing 350°
Zero and span adjustable
Function programmable
Process connection: for Aseptoflex adapter
2 Output OUT1 = Switching output OUT2 = Analog output
4-digit alphanumeric display
Measuring range: -12.4...250.0 mbar

Application

Application		Type of pressure: relative pressure Hygienic systems, viscous media and liquids with suspended particles Liquids and gases
Pressure rating	[mbar]	10000
Bursting pressure min.	[mbar]	30000
Medium temperature	[°C]	-25...125 (145 max. 1h)

Electrical data

Electrical design		DC PNP/NPN
Operating voltage	[V]	18...32 DC
Current consumption	[mA]	< 50
Insulation resistance	[MΩ]	> 100 (500 V DC)
Protection class		III
Reverse polarity protection		yes

Outputs

PI2098 - Combined pressure sensor - eclass: 27201302 / 27-20-13-02

Output		2 Output OUT1 = Switching output OUT2 = Analog output
Output function		1 x normally open / closed programmable + 1 x analog (I / U, scaleable 1:4)
Current rating	[mA]	250
Voltage drop	[V]	< 2
Short-circuit protection		yes (non-latching)
Overload protection		yes
Switching frequency	[Hz]	6
Analog output		I: 4...20 mA (Ineg: 20...4 mA) / U: 0...10 V (Uneg: 10...0 V)
Max. load	[Ω]	I / Ineg: max. (Ub - 10 V) x 50; U / Uneg: min. 2000
Measuring / setting range		
Display unit		mbar, kPa, inH2O, mmWS, % der Spanne
Measuring range	[mbar]	-12.4...250.0
Setting range		
Set point, SP	[mbar]	-12.0...250.0
Reset point, rP	[mbar]	-12.4...249.6
Analog start point, ASP	[mbar]	-12.4...187.4
Analog end point, AEP	[mbar]	50.0...250.0
in steps of	[mbar]	0.2
Factory setting		SP1 = 62.4 mbar; rP1 = 57.40 mbar ASP = 0.0 mbar; AEP = 250.0 mbar
Accuracy / deviations		
Accuracy / deviations (in % of the span) Turn down 1:1		
Switch point accuracy		< ± 0.2
Characteristics deviation *)		< ± 0.2
Linearity		< ± 0.15
Hysteresis		< ± 0.15
Repeatability **)		< ± 0.1
Long-term stability ***)		< ± 0.1
Temperature coefficients (TEMPCO) in the temperature range 0...70° C (in % of the span per 10 K)		
Greatest TEMPCO of the zero point		< ± 0.05
Greatest TEMPCO of the span		< ± 0.15
Reaction times		
Power-on delay time	[s]	0.5
Min. response time switching output	[ms]	100
Damping for the switching output (dAP)	[s]	0.1...100.0
Damping for the analog output (dAA)	[s]	0.1...100.0
Step response time analogue output	[ms]	25
Integrated watchdog		yes
Software / programming		
Programming options		hysteresis / window function; N.O. / N.C; output polarity; current / voltage outputs; damping; calibration of displayed values; display can be rotated / deactivated; display unit
Environment		
Ambient temperature	[°C]	-25...80
Storage temperature	[°C]	-40...100
Protection		IP 67 / IP 69K
Tests / approvals		
EMC		EN 61000-4-2 ESD: 4 kV CD / 8 kV AD EN 61000-4-3 HF radiated: 10 V/m EN 61000-4-4 Burst: 2 kV EN 61000-4-5 Surge: 0.5/1 kV EN 61000-4-6 HF conducted: 10 V
Shock resistance		DIN IEC 68-2-27: 50 g (11 ms)

PI2098 - Combined pressure sensor - eclass: 27201302 / 27-20-13-02

Vibration resistance		DIN IEC 68-2-6: 20 g (10...2000 Hz)
MTTF	[Years]	173
Mechanical data		
Process connection		for Aseptoflex adapter
Materials (wetted parts)		ceramics (99.9 % Al2 O3); PTFE; stainless steel 316L / 1.4435; surface characteristics: Ra < 0.4 / Rz 4
Housing materials		stainless steel 316L / 1.4404; PC (Makrolon); PBT (Pocan); PEI; FPM (Viton); PTFE
Switching cycles min.		100 million
Weight	[kg]	0.406
Displays / operating elements		
Display		Display unit 6 x green Switching status LED yellow Function display 4-digit alphanumeric display Measured values 4-digit alphanumeric display
Electrical connection		
Connection		M12 connector; gold-plated contacts

Wiring

Programming of the output function
----------OUT1----------
- Switching output
Hno = hysteresis / normally open
Hnc = hysteresis / normally closed
Fno = window function / normally open
Fnc = window function / normally closed
----------OUT2----------
- Analog output
I = current output (4...20 mA)
U = voltage output (0...10 V)

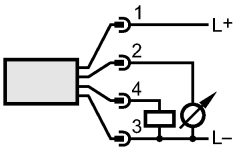

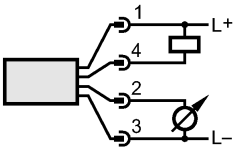

Remarks		
Remarks		*) linearity, incl. hysteresis and repeatability; (limit value setting to DIN 16086) **) with temperature fluctuations < 10 K ***) in % of the span per year The 3-A qualification is only valid if adapters with 3-A qualification are used for installation.
Pack quantity	[piece]	1