efector200

OR0003

ORS-V

Photoelectric sensors

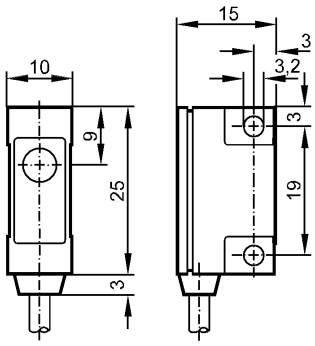

Product characteristics		
Through-beam sensor		
Rectangular, plastics		
Cable		
Transmitter		
Sensing range 2m		
Electrical data		
Electrical design		connection to control monitors OV5012 or OV0010
Type of light		Infrared light 950 nm
Reverse polarity protection		no
Outputs		
Short-circuit protection		no
Overload protection		no
Monitoring range		
Sensing range	[m]	2
Environment		
Ambient temperature	[°C]	-20...80
Protection		IP 67
Tests / approvals		
EMC		EN 60947-5-2
MTTF	[Years]	57078
Mechanical data		
Housing materials		modified PPO
Weight	[kg]	0.06
Electrical connection		
Connection		screened cable / 2 m; 1 x 0.14 mm²

Wiring

Core colors

RD red

screen screen

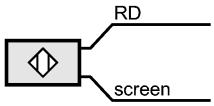

Accessories		
Accessories (included)		Angle bracket; E20212
Remarks		
Pack quantity	[piece]	1