Model number

OMH-ML5

Mounting bracket for series ML5 sensors

Features

- Mounting bracket
- Simple and fast mounting

Dimensions

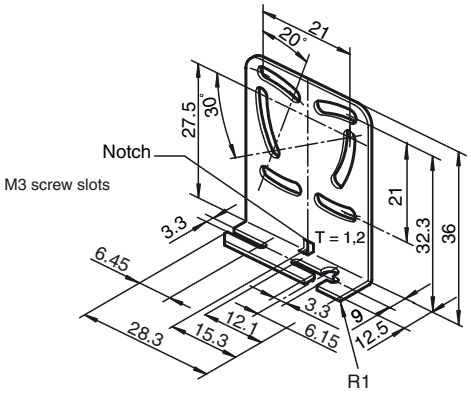

Technical data

Mechanical specifications	
Material	Stainless steel
Mass	approx. 10 g
Suitable series	
Series	ML5

Release date: 2005-07-14 11:11 Date of issue: 2005-07-14 184793_ENG.xml

Copyright Pepperl+Fuchs, Printed in Germany