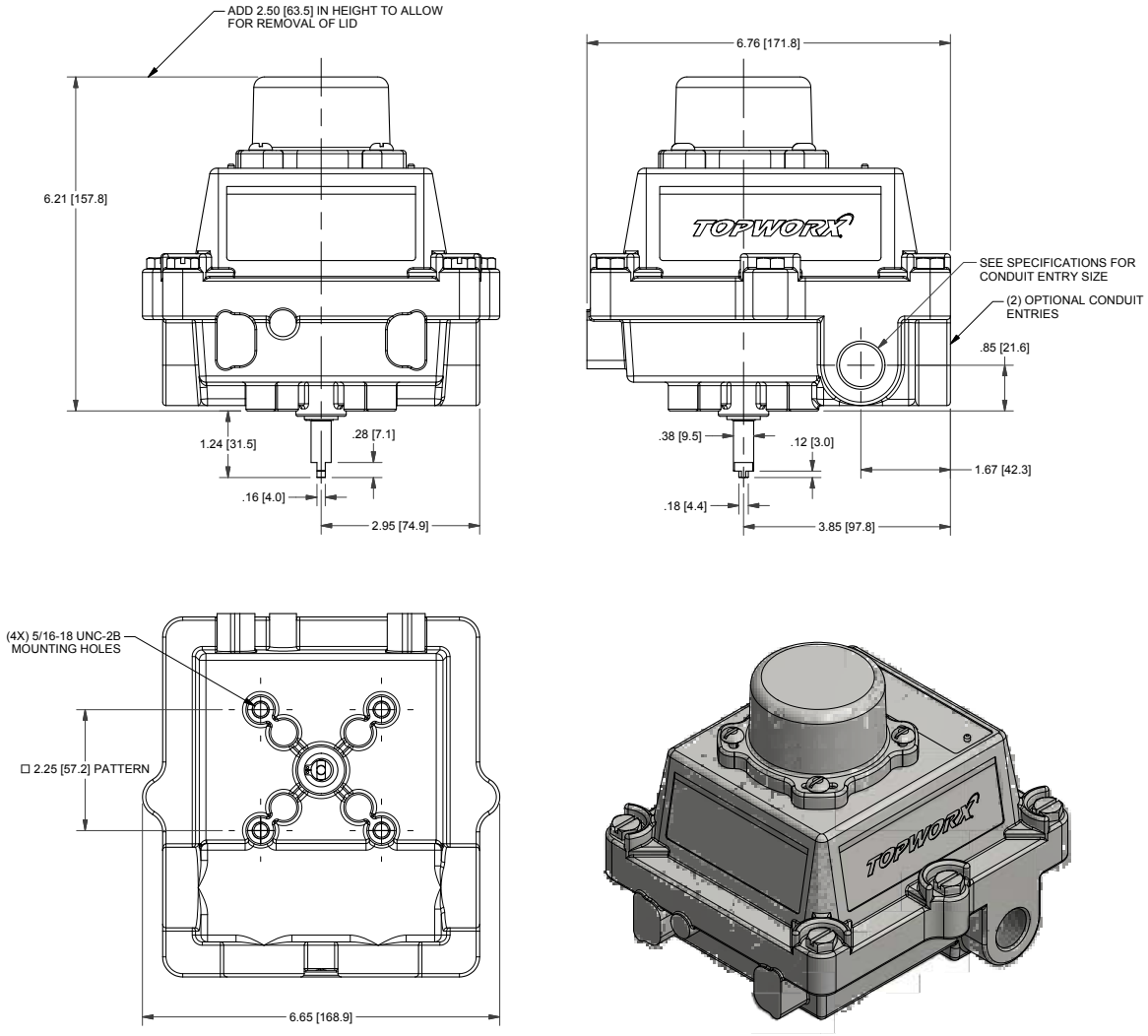

MODEL NUMBER

DXP-M417NEB

PRODUCT LINE

Switchbox DXP and DXS

SPECIFICATIONS

Enclosure	Tropicalized aluminum
Bus/Sensor	(4) Mechanical SPDT
Area Classification	Explosion proof / flame proof
Visual Display	3 way, 180° T Port 3 position
Shaft	NAMUR 304 stainless steel
Conduit Entries	(2) $\frac{3}{4}$" NPT
O-Rings	Buna-N
Pilot	No pilot device(s)
Spool Valve	No spool valve
Valve Cv	No valve Cv
Manual Override	No manual override
Regional Certification	No regional certification
N Switch	No N Switch

WIRING DIAGRAM

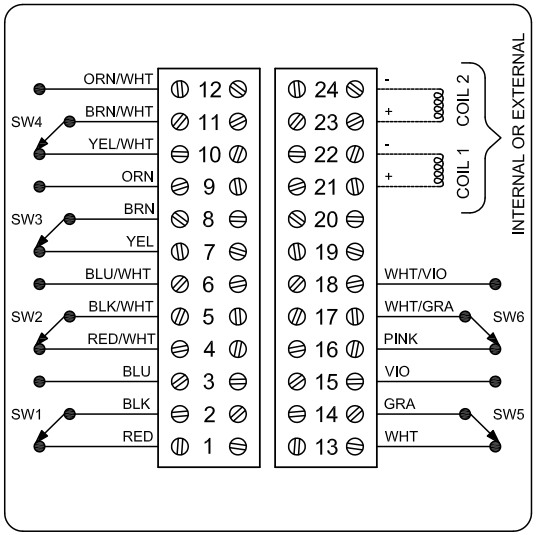

NAMEPLATE

CE 0518 Ex II 2 G

UL CERTIFIED SAFETY US CA E125326 USA

Cl I Div 1, Grps C-D; Type 4X
Ex d IIB + H_2 T6 Gb; IP66/67
-50°C ≤ Ta ≤ 60°C
SIRA 07ATEX1273X IECEx SIR 07.0093X
SWITCH: SPDT 15A/125VAC, 250VAC

Model #:

Telemetering Equipment for use In Hazardous Locations
WARNING: Disconnect the power before servicing. Keep tightly closed during operation. Must be known to be non-hazardous area before servicing. Clean only with damp cloth.
AVERTISSEMENT: Débranchez l'alimentation avant l'entretien. Conserver hermétiquement fermé pendant le fonctionnement. Doivent être connus pour être des zones non dangereuses avant l'entretien.

TopWorx
3300 Fern Valley Road
Louisville, KY 40213 USA
www.topworx.com

Serial #:

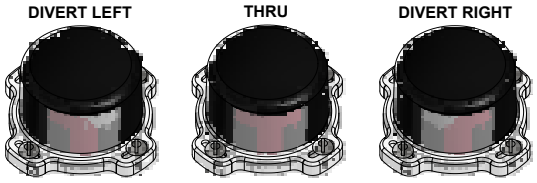

Electrol
www.electrolsupply.com
sales@electrolsupply.com
1-800-663-6576