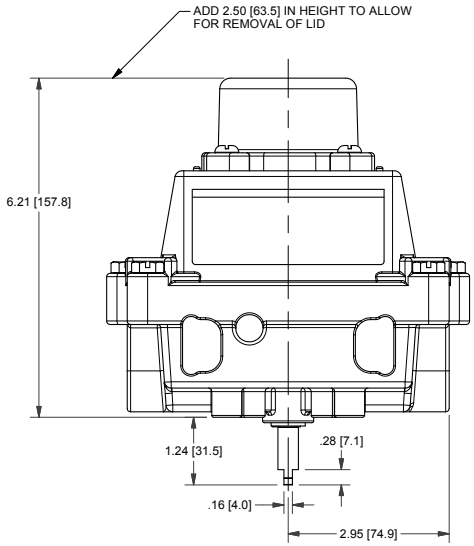

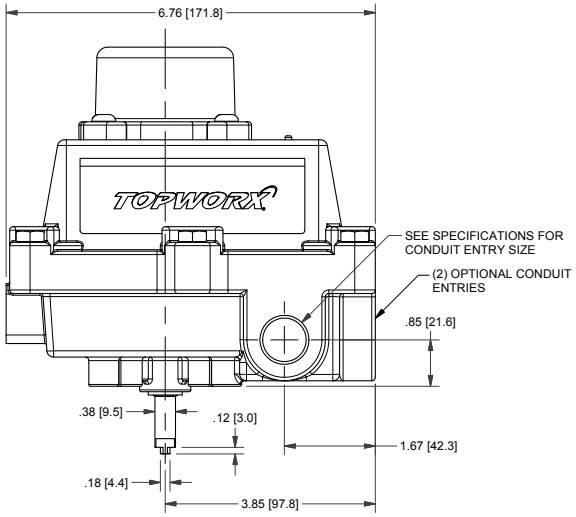

DXP-L40YN4S

Switchbox DXP and DXS

Enclosure	Tropicalized aluminum
Bus/Sensor	(4) GO™ Switches SPDT hermetic seal
Area Classification	Intrinsically safe
Visual Display	90° Yellow OPEN, Black CLOSED
Shaft	NAMUR 304 stainless steel
Conduit Entries	(2) $\frac{3}{4}$" NPT, (2) $\frac{1}{2}$" NPT
O-Rings	Silicone
Pilot	No pilot device(s)
Spool Valve	No spool valve
Valve Cv	No valve Cv
Manual Override	No manual override
Regional Certification	No regional certification
N Switch	No N Switch

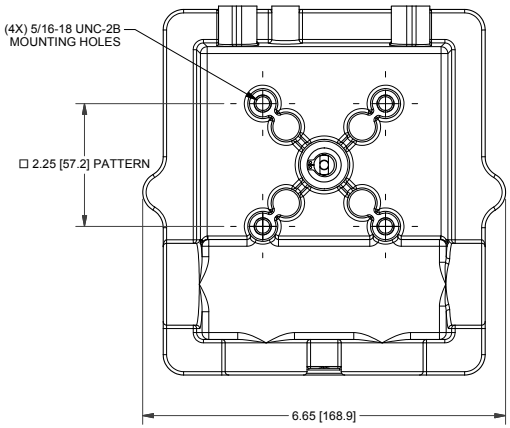

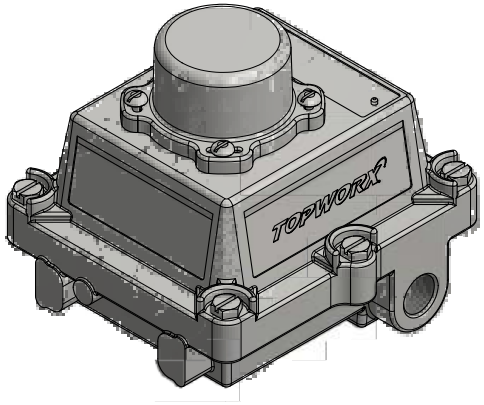

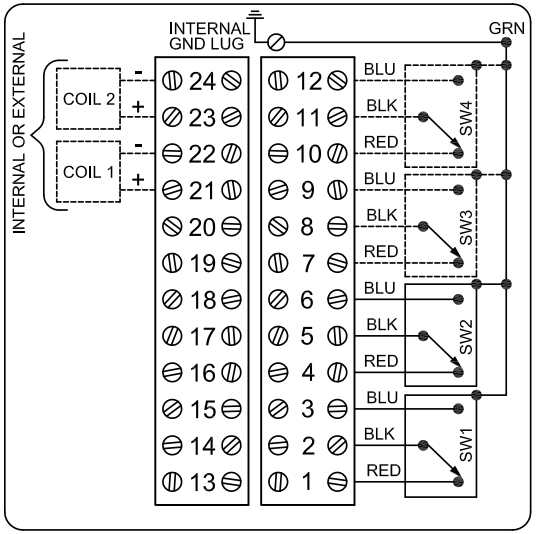

CE 0518 Ex II 2 GD UL CERTIFIED SAFETY USA E125326

Cl I Div 1, Grps A-D; Type 4X
Ex ia IIC T4 Gb; Ex tb IIIC T106°C Db; IP66/67
-50°C ≤ Ta ≤ 60°C
SIRA 14ATEX2241X IECEx SIR 14.0078X
Intrinsically Safe - Exia / Sécurité Intrinséque
Install per Control Drawing ES-01416-1

Model #:

Telemetering Equipment for use In Hazardous Locations

WARNING: Substitution of components may impair intrinsic safety. The Installer shall confirm which certified sub-assemblies are fitted and ensure compliance with the entity parameters in the appropriate certificate. Potential electrostatic charging hazard - Clean only with damp cloth.

AVERTISSEMENT: La substitution de composants peut compromettre la sécurité intrinsèque.

TopWorx
3300 Fern Valley Road
Louisville, KY 40213 USA
www.topworx.com

Serial #:

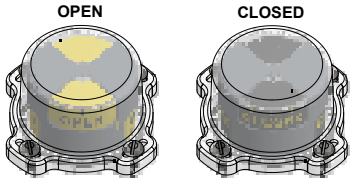

Electrol
www.electrolsupply.com
sales@electrolsupply.com
1-800-663-6576