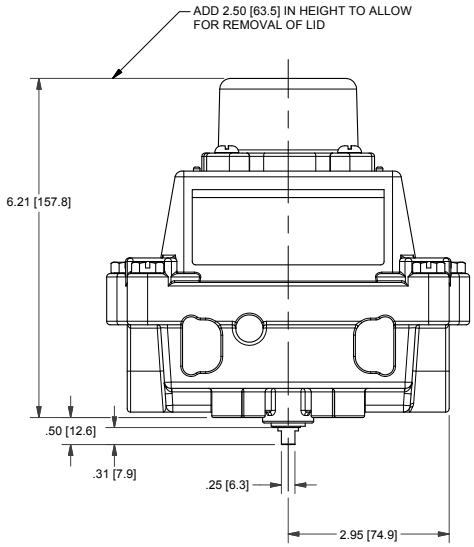

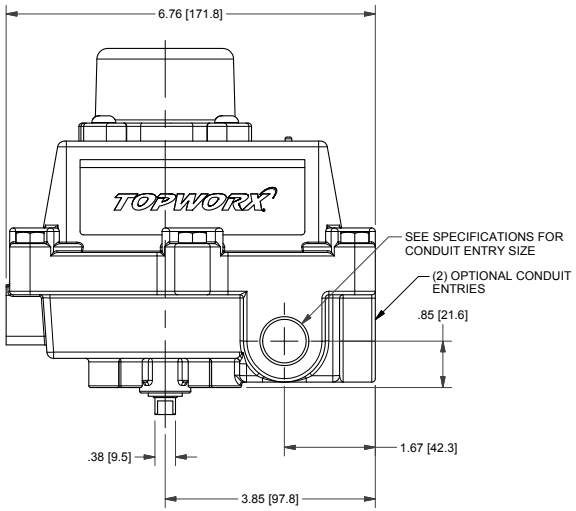

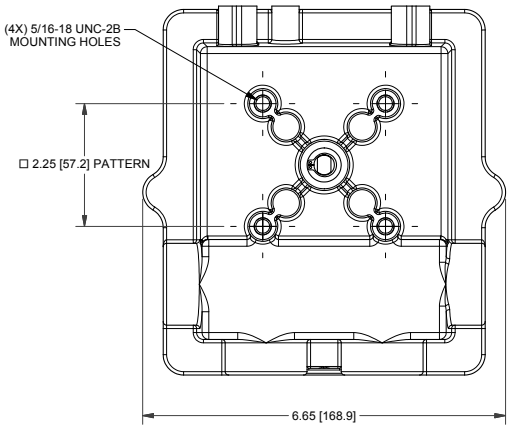

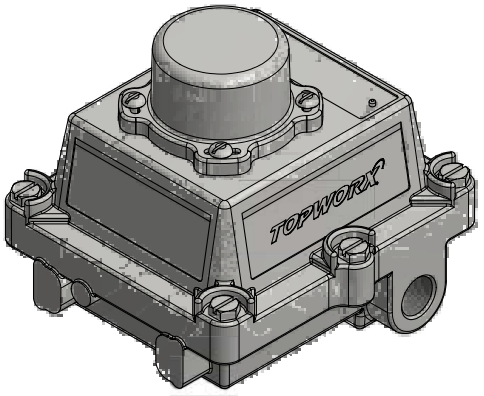

MODEL NUMBER

DXP-L20GS4B

PRODUCT LINE

Switchbox DXP and DXS

SPECIFICATIONS

Enclosure	Tropicalized aluminum
Bus/Sensor	(2) GO™ Switches SPDT hermetic seal
Area Classification	Intrinsically safe
Visual Display	Standard 90° Green OPEN, Red CLOSED
Shaft	$\frac{1}{4}$" DD 304 stainless steel
Conduit Entries	(2) $\frac{3}{4}$" NPT, (2) $\frac{1}{2}$" NPT
O-Rings	Buna-N
Pilot	No pilot device(s)
Spool Valve	No spool valve
Valve Cv	No valve Cv
Manual Override	No manual override
Regional Certification	No regional certification
N Switch	No N Switch

WIRING DIAGRAM

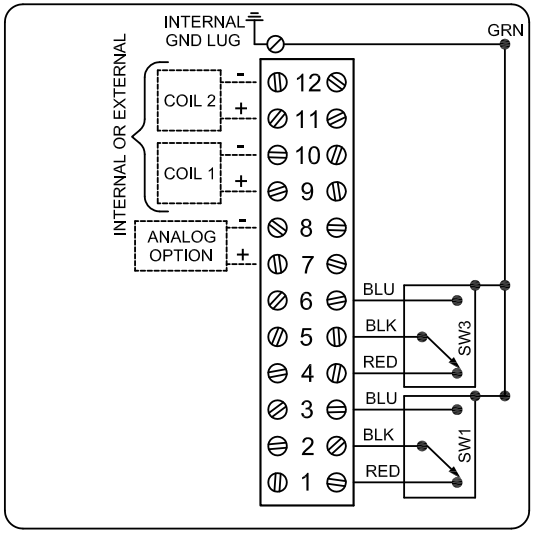

NAMEPLATE

CE 0518 Ex II 2 G

UL CERTIFIED SAFETY US CA E125326 USA

Cl I Div 1, Grps A-D; Type 4X
Ex ia IIC T4 Gb; IP66/67
-50°C ≤ Ta ≤ 60°C
SIRA 14ATEX2241X IECEx SIR 14.0078X
Intrinsically Safe - Exia / Sécurité Intrinséque
Install per Control Drawing S-K127 and S-K127A

Model #:

Telemetering Equipment for use In Hazardous Locations

WARNING: Substitution of components may impair intrinsic safety. The Installer shall confirm which certified sub-assemblies are fitted and ensure compliance with the entity parameters in the appropriate certificate. Potential electrostatic charging hazard - Clean only with damp cloth.

AVERTISSEMENT: La substitution de composants peut compromettre la sécurité intrinsèque.

TopWorx
3300 Fern Valley Road
Louisville, KY 40213 USA
www.topworx.com

Serial #:

OPEN

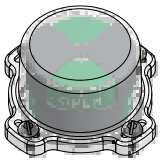

CLOSED

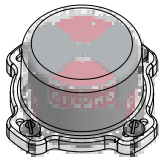

Electrol
www.electrolsupply.com
sales@electrolsupply.com
1-800-663-6576