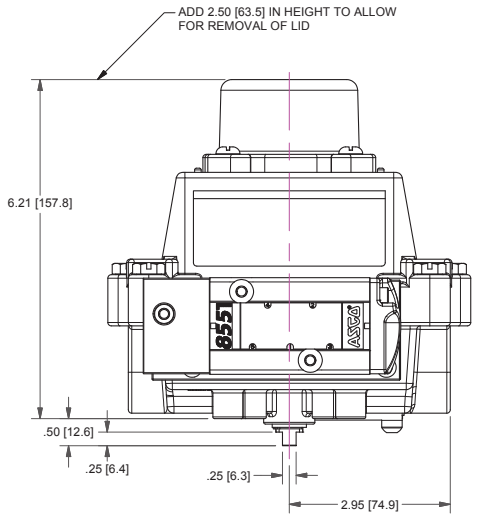

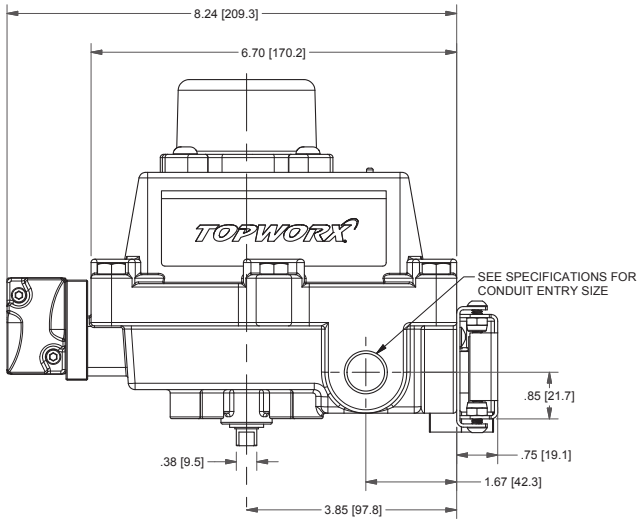

DXP-ES1GS4B162T

Switchbox DXP and DXS

Enclosure	Tropicalized aluminum
Bus/Sensor	ESD/PST module w/ GO^{TM} Switch
Area Classification	Explosion proof / flame proof
Visual Display	Standard 90° Green OPEN, Red CLOSED
Shaft	$\frac{1}{4}$" DD 304 stainless steel
Conduit Entries	(2) $\frac{3}{4}$" NPT, (2) $\frac{1}{2}$" NPT
O-Rings	Buna-N
Pilot	(1) 24Vdc pilot, fail open/closed
Spool Valve	316 stainless steel
Valve Cv	0.86 Cv (1/4" NPT Ports)
Manual Override	Partial stroke test button w/ lockable cover
Regional Certification	No regional certification
N Switch	No N Switch

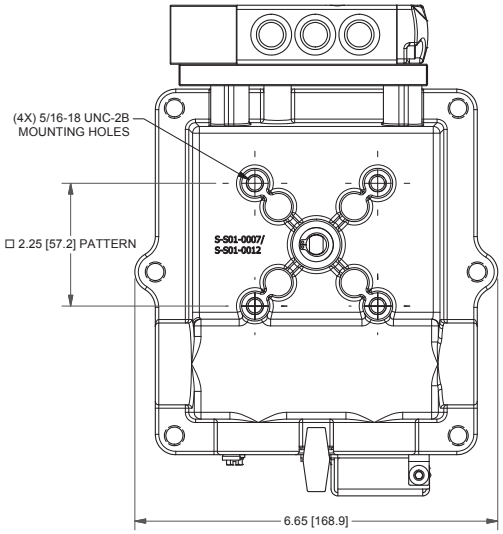

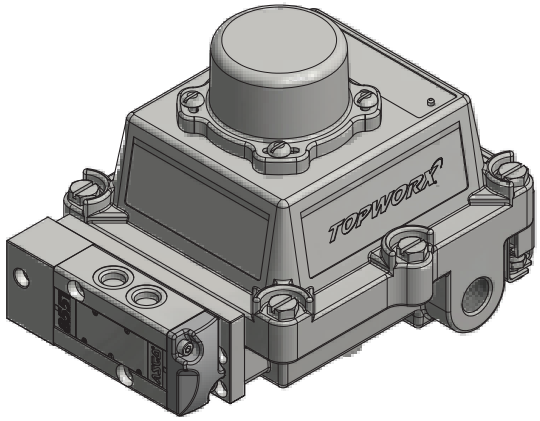

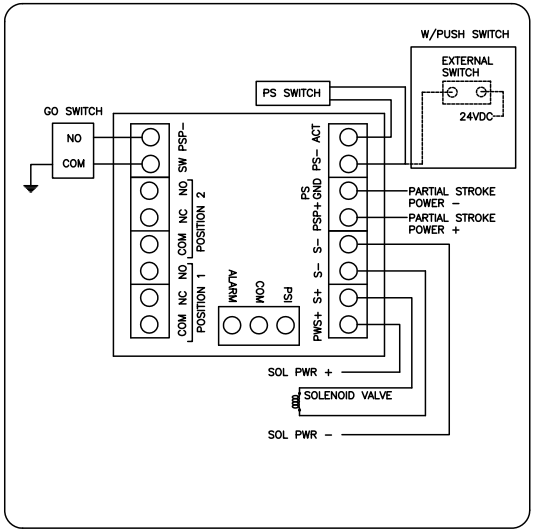

CE 0518 Ex II 2 G UL CERTIFIED SAFETY US-CA E125326 USA SIL 3

CI I Div 1, Grps C-D; CI I Div 2, Grps A-D; Type 4X
Ex d IIB + H_2 T6 Gb; IP65
-50°C ≤ Ta ≤ 60°C
SIRA 07ATEX1273X IECEx SIR 07.0093X
Electrical Rating: 250mA/24VDC, 120VAC
PILOT: 24 VDC

Model #:

Telemetering Equipment for use in Hazardous Locations
WARNING: Disconnect the power before servicing. Keep tightly closed during operation. Must be known to be non-hazardous area before servicing. Clean only with damp cloth.
AVERTISSEMENT: Débranchez l'alimentation avant l'entretien. Conserver hermétiquement fermé pendant le fonctionnement. Doivent être connus pour être des zones non dangereuses avant l'entretien.

TopWorx
3300 Fern Valley Road
Louisville, KY 40213 USA
www.topworx.com

Serial #:

OPEN

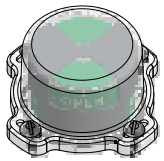

CLOSED

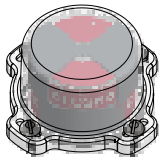

Electrol
www.electrolsupply.com
sales@electrolsupply.com
1-800-663-6576