ecomat300

AC5015

EEMS-Base FC V2A

AS-Interface bus system

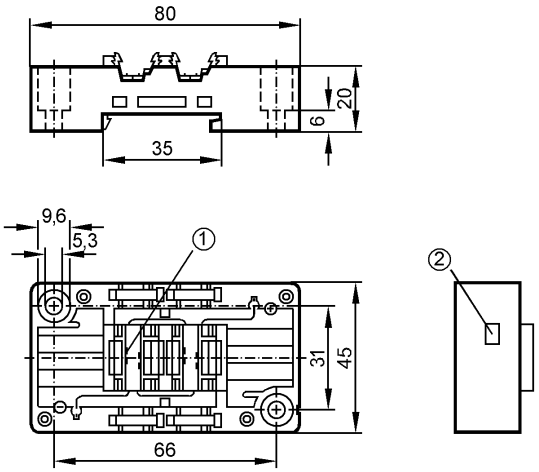

1: contact pins
2: label

Product characteristics		
FC-E coupling module		
Mounting on DIN rail and panel		
Quick mounting technology for AS-i flat cable		
stainless steel		
AS-i interface to module upper part		
Electrical data		
Electrical design		FC-E coupling module with external power supply
Operating voltage	[V]	26.5...31.6 DC (AS-i) / 24 DC
Environment		
Ambient temperature	[°C]	-25...85
Protection		IP 67; IP 20 / IP 65 / IP 67 depending on the upper part used
Mechanical data		
Housing materials		PBT (Pocan); stainless steel (303S22)
Weight	[kg]	0.062
Electrical connection		
Connection		via contact pins in the unit
Contact rating		< 2 A
Remarks		
Pack quantity	[piece]	1