MICRO SWITCH
a Honeywell Division
FED.MFG.CODE 91929

ACTUATOR ROLLER PLUNGER

CATALOG LISTING
8AS262-BZ

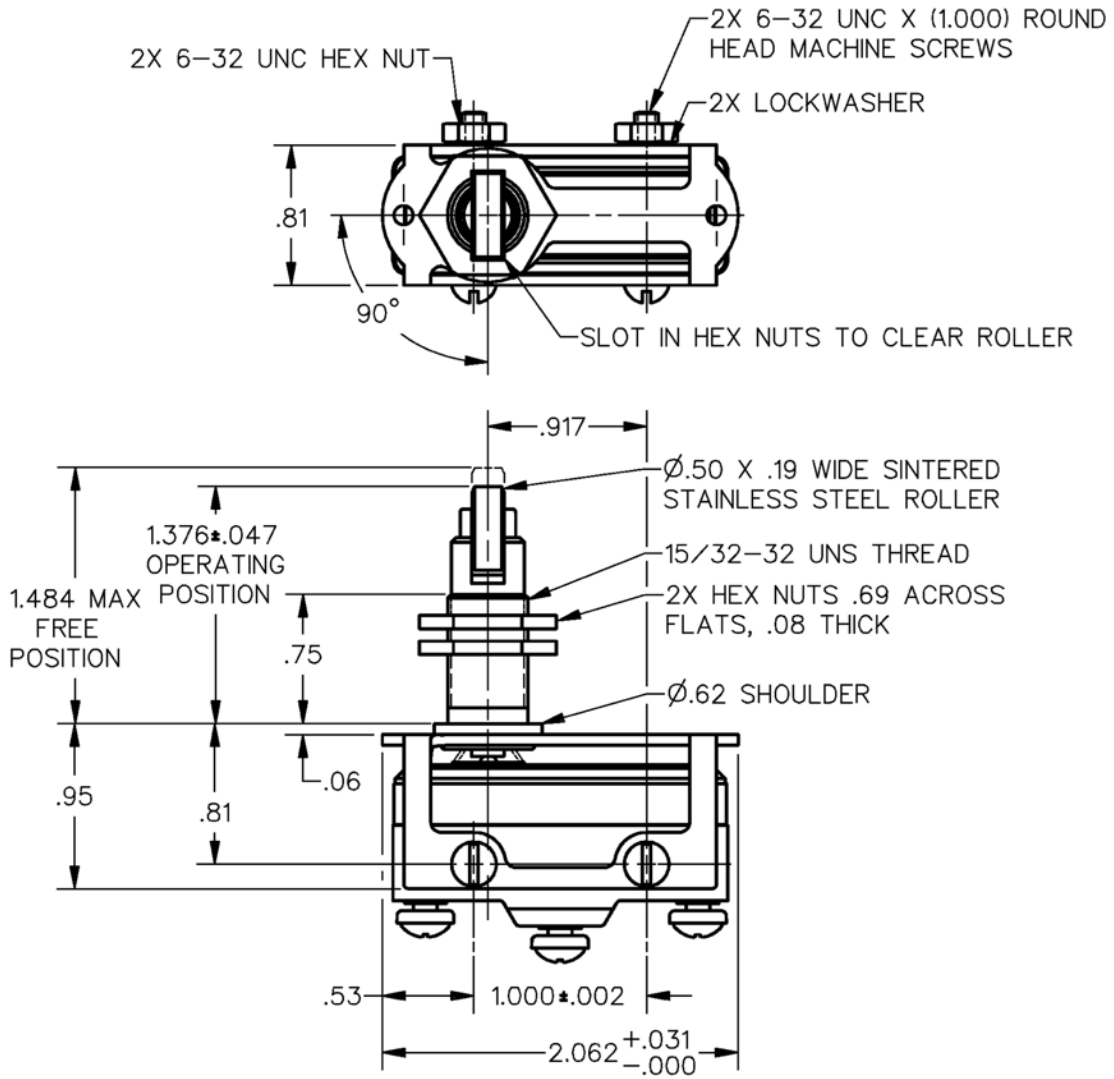

NOTES
1 – ASSEMBLY USES BZ-2R244-A2 BASIC SWITCH
2 – BASIC SWITCH WILL WITHSTAND TEMPERATURE OF 400°F FOR 100 HOURS

ANSI Y14.5M-1982 APPLIES

THIS DRAWING COVERS A PROPRIETARY ITEM AND IS THE PROPERTY OF MICRO SWITCH, A DIVISION OF HONEYWELL. THIS DRAWING IS NOT TO BE COPIED OR USED WITHOUT THE APPROVAL OF MICRO SWITCH.

THIRD ANGLE PROJECTION

CHARACTERISTICS	ELECTRICAL DATA	SCALE FULL	DO NOT SCALE PRINT
OVERTRAVEL — — — — —.125 APPROX	CONTACT ARRANGEMENT	UNLESS OTHERWISE SPECIFIED TOLERANCES ARE	
		ONE PLACE (.0)	±.030
		TWO PLACE (.00)	±.015
		THREE PLACE (.000)	±.005
		ANGLES	±2°
		WEIGHT	

CATALOG LISTING 8AS262-BZ
PAGE 1 OF 1
ISSUE 1
REVISIONS
REPLACES X110468-MD
RELEASE NO. PR-23255
CHECK
CHECK 29JAN98 T S M
CHECK
DRAWN 29JAN98 T S M
DDM/CAD