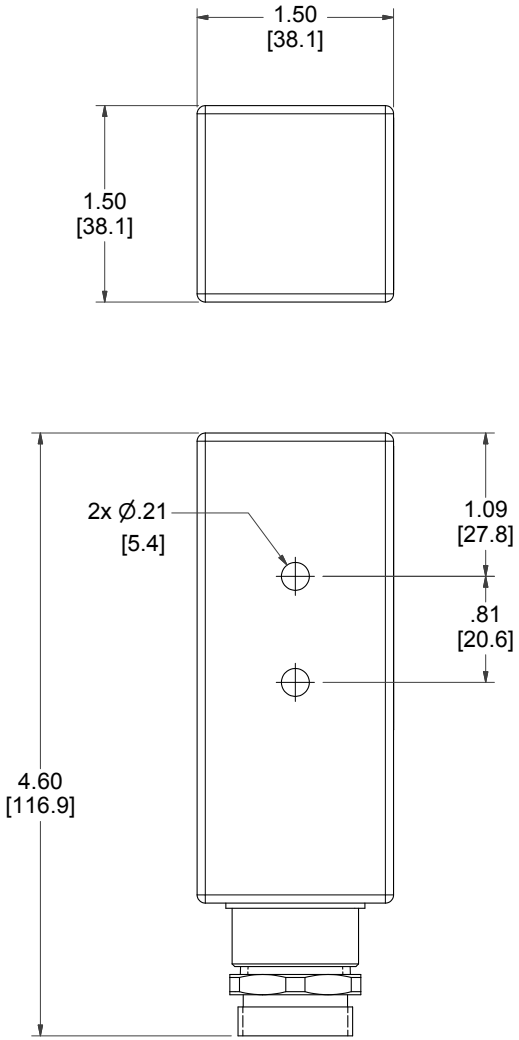

MODEL NUMBER

21-11548-DCD

PRODUCT LINE

GO™ Switch 10/20 Series

SPECIFICATIONS

Model	21 Model
Contact Form	SPDT (Form C)
Sensing Range	Standard approx. 3/8" side
Outlet Position	Bottom of enclosure
Enclosure Material	Stainless steel w/polyurethane
Area Classification	UL General Purpose
Wiring Options	4 pin mini QDC
Regional Certification	No regional certification
Custom Field	

WIRING DIAGRAM

4 PIN MINI CONNECTOR – DCD
SPDT FORM C

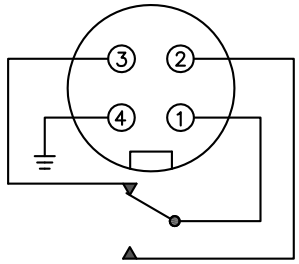

PIN 1 – COM (BLACK)
PIN 2 – N/O (WHITE)
PIN 3 – N/C (RED)
PIN 4 – GND (GREEN)

NAMEPLATE

COUNTRY OF ORIGIN US

TYPE 4X
ELECTRICAL RATING: 120VAC/10A, 24VDC/3A RESISTIVE; 480VAC/240VDC MAX

Model #:

Serial #:

GO SWITCH

Electrol
www.electrolsupply.com
sales@electrolsupply.com
1-800-663-6576