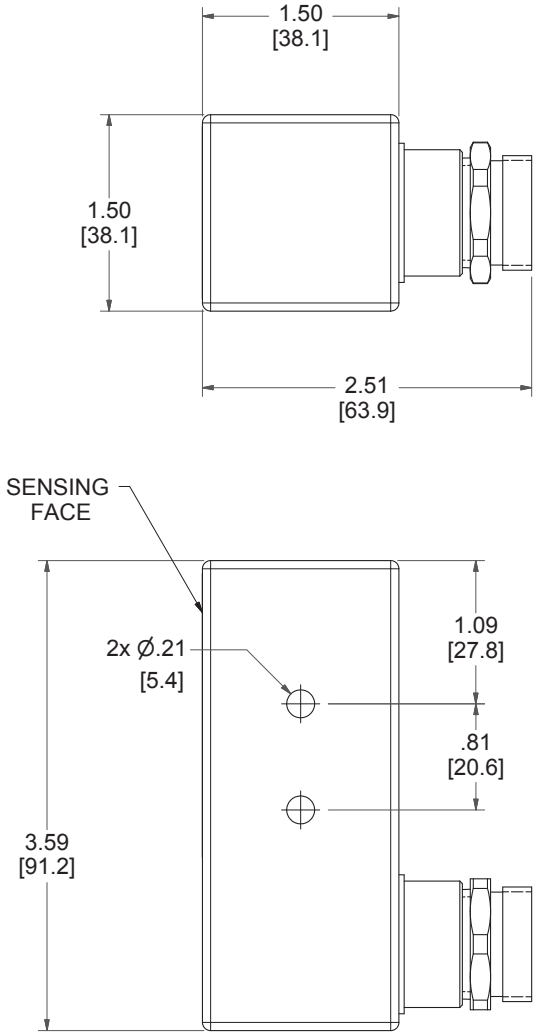

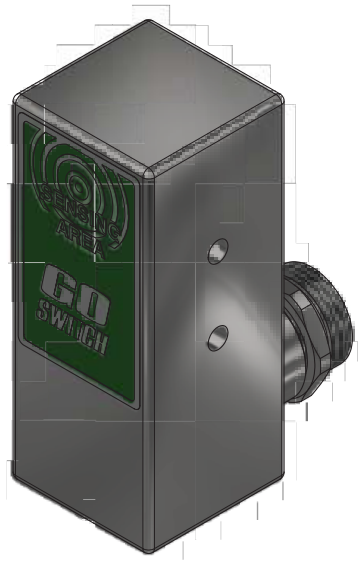

MODEL NUMBER

21-11138-DCD

PRODUCT LINE

GO™ Switch 10/20 Series

SPECIFICATIONS

Model	21 Model
Contact Form	SPDT (Form C)
Sensing Range	Standard approx. 3/8" side
Outlet Position	Behind sensing area
Enclosure Material	Brass w/polyurethane
Area Classification	UL General Purpose
Wiring Options	4 pin mini QDC
Regional Certification	No regional certification
Custom Field	

WIRING DIAGRAM

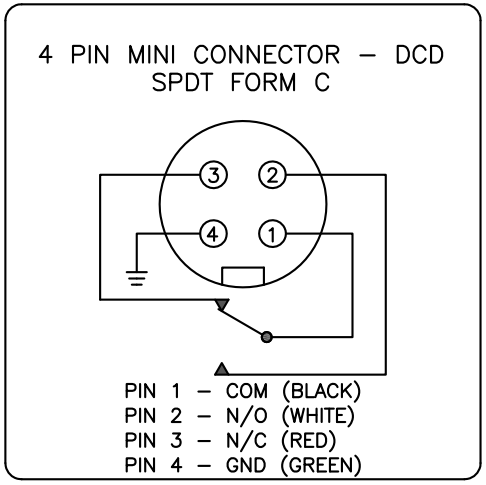

NAMEPLATE

COUNTRY OF ORIGIN US

TYPE 4X
ELECTRICAL RATING: 120VAC/10A, 24VDC/3A RESISTIVE; 480VAC/240VDC MAX

Model #:

Serial #:

GO SWITCH

Electrol

www.electrolsupply.com
sales@electrolsupply.com
1-800-663-6576