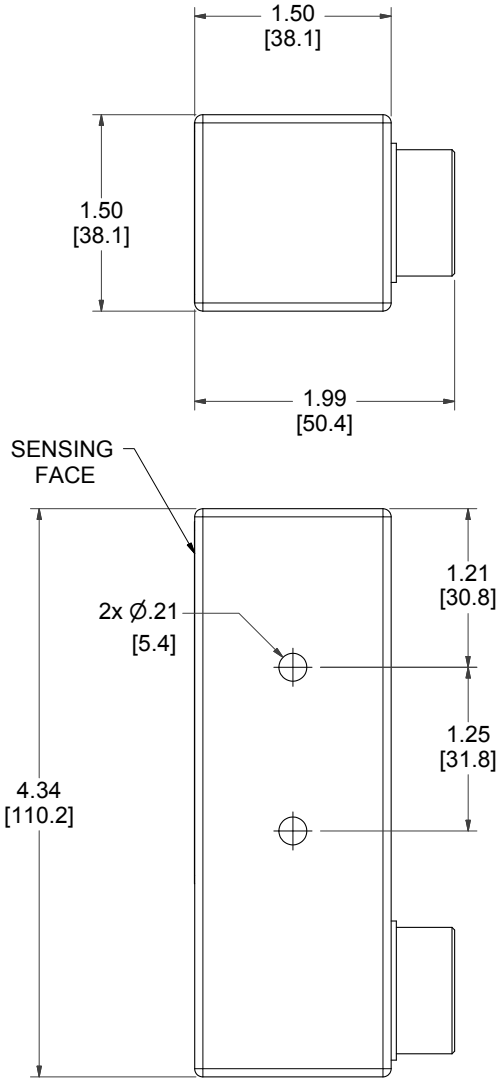

MODEL NUMBER

11-51124-A2

PRODUCT LINE

GO™ Switch 10/20 Series

SPECIFICATIONS

Model	11 Model
Contact Form	DMDB, (Form Z)
Sensing Range	Standard approx. 3/8" side
Outlet Position	Behind sensing area
Enclosure Material	Stainless steel
Area Classification	CSA/FM Cl I, Div 1
Wiring Options	3ft PVC lead wire
Regional Certification	No regional certification
Custom Field	

WIRING DIAGRAM

PVC/PTFE LEADS – 5 WIRE
DMDB

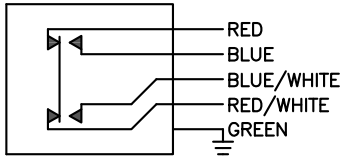

NAMEPLATE

COUNTRY OF ORIGIN US

CL I DIV 1, GRPS A,B,C,D; CL II DIV 1, GRPS E,F,G; CL III;
T6/T4; -50°C ≤ Ta ≤ 60°C/80°C
ELECTRICAL RATING: 120VAC/10A, 24VDC/3A RESISTIVE; 480VAC/240VDC MAX
LEAD SEAL IS REQUIRED WITHIN 18" OF ENCLOSURE.

Model #: **Serial #:**

www.electrolsupply.com
sales@electrolsupply.com
1-800-663-6576