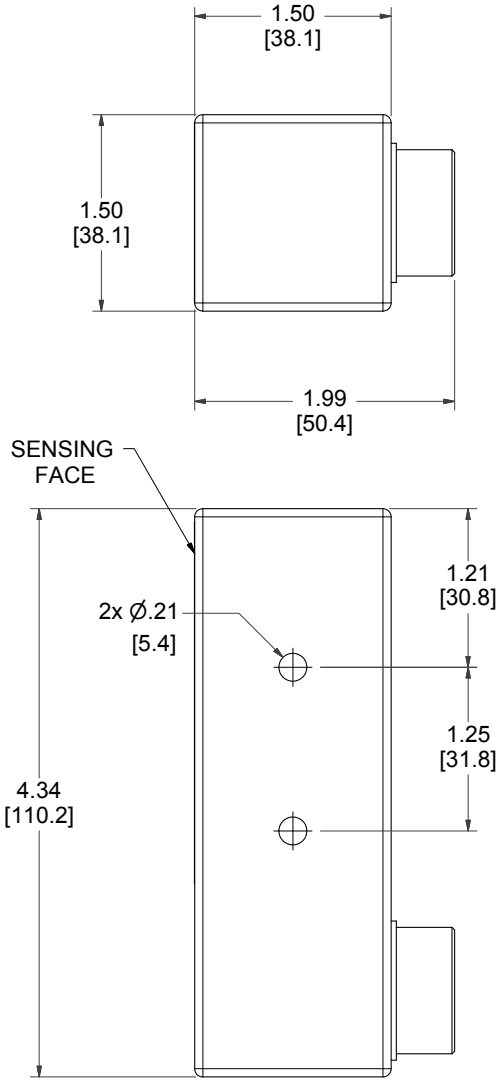

MODEL NUMBER

11-12148-B3

PRODUCT LINE

GO™ Switch 10/20 Series

SPECIFICATIONS

Model	11 Model
Contact Form	SPDT (Form C)
Sensing Range	Extended approx. 9/16" side
Outlet Position	Behind sensing area
Enclosure Material	Stainless steel w/polyurethane
Area Classification	UL General Purpose
Wiring Options	6ft PVC cable
Regional Certification	No regional certification
Custom Field	

WIRING DIAGRAM

SO CABLE – 4 WIRE
SPDT

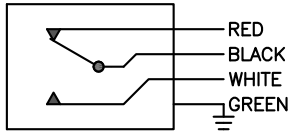

NAMEPLATE

COUNTRY OF ORIGIN US

TYPE 4X
ELECTRICAL RATING: 120VAC/10A, 24VDC/3A RESISTIVE; 480VAC/240VDC MAX

Model #: Serial #:

GO SWITCH

Electrol
www.electrolsupply.com
sales@electrolsupply.com
1-800-663-6576