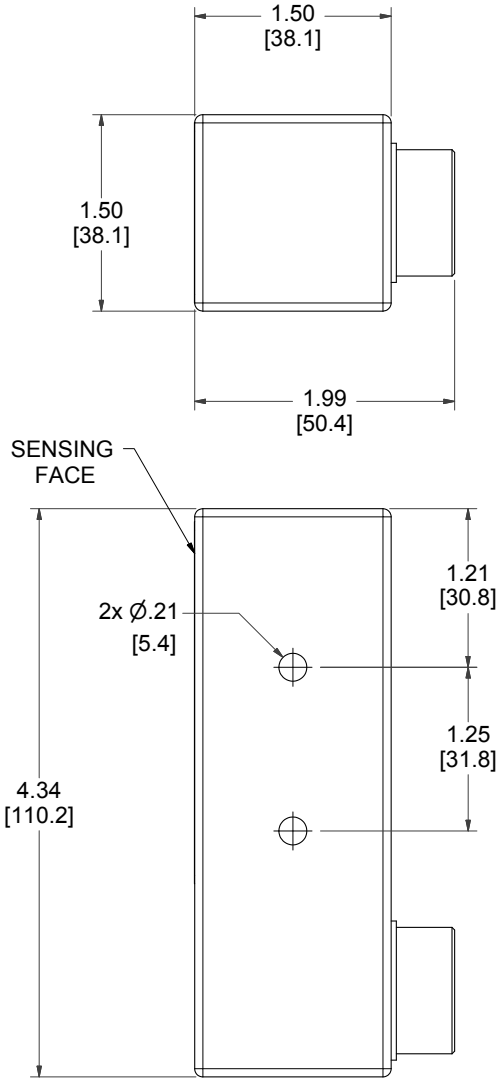

MODEL NUMBER

11-12127-B4

PRODUCT LINE

GO™ Switch 10/20 Series

SPECIFICATIONS

Model	11 Model
Contact Form	SPDT (Form C)
Sensing Range	Extended approx. 9/16" side
Outlet Position	Behind sensing area
Enclosure Material	Stainless steel
Area Classification	cUL General Purpose
Wiring Options	12ft PVC cable
Regional Certification	No regional certification
Custom Field	

WIRING DIAGRAM

SO CABLE – 4 WIRE
SPDT

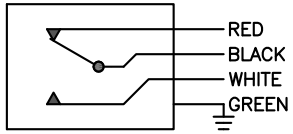

NAMEPLATE

COUNTRY OF ORIGIN US

TYPE 4X
ELECTRICAL RATING: 120VAC/10A, 24VDC/3A RESISTIVE; 480VAC/240VDC MAX

Model #: Serial #:

GO SWITCH

Electrol
www.electrolsupply.com
sales@electrolsupply.com
1-800-663-6576