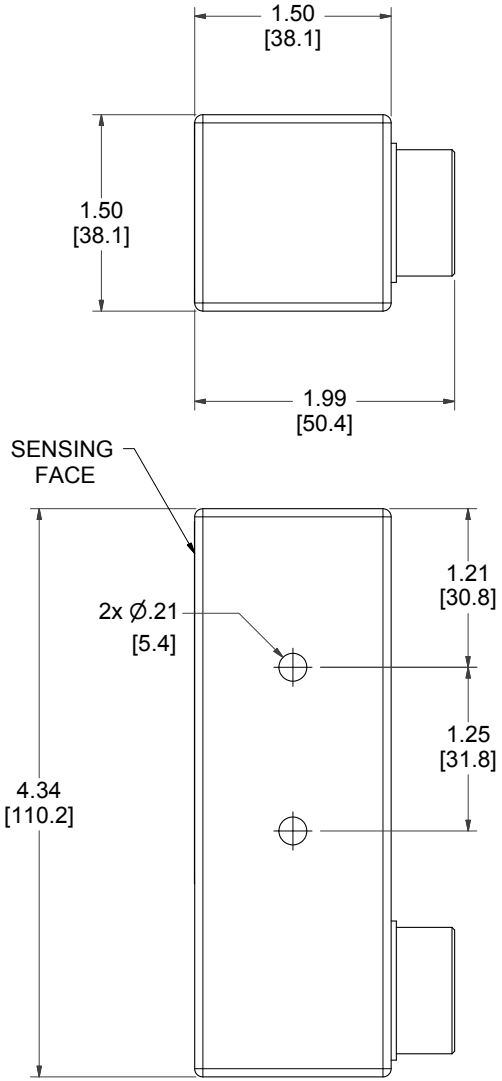

## MODEL NUMBER

11-11127-F4

## PRODUCT LINE

GO™ Switch 10/20 Series

## SPECIFICATIONS

| | |
|---|---|
| Model | 11 Model |
| Contact Form | SPDT (Form C) |
| Sensing Range | Standard approx. 3/8" side |
| Outlet Position | Behind sensing area |
| Enclosure Material | Stainless steel |
| Area Classification | cUL General Purpose |
| Wiring Options | 12ft Teflon lead wire |
| Regional Certification | No regional certification |
| Custom Field | |

## WIRING DIAGRAM

PVC/PTFE LEADS – 4 WIRE
SPDT

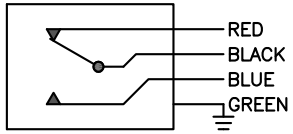


## NAMEPLATE

COUNTRY OF ORIGIN US

TYPE 4X
ELECTRICAL RATING: 120VAC/10A, 24VDC/3A RESISTIVE; 480VAC/240VDC MAX

Model #:

Serial #:

GO SWITCH

Electrol
www.electrolsupply.com
sales@electrolsupply.com
1-800-663-6576